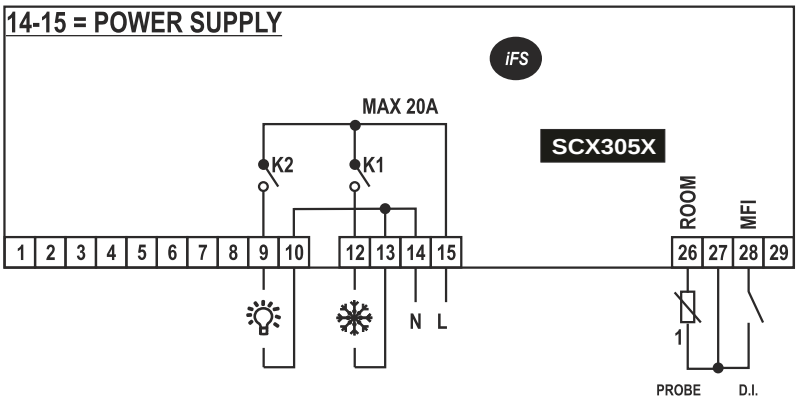
14-15 = POWER SUPPLY
iFS
MAX 20A
SCX305X
K2
K1
ROOM
MFI
1 2 3 4 5 6 7 8 9 10 12 13 14 15
26 27 28 29
N L
1
PROBE
D.I.

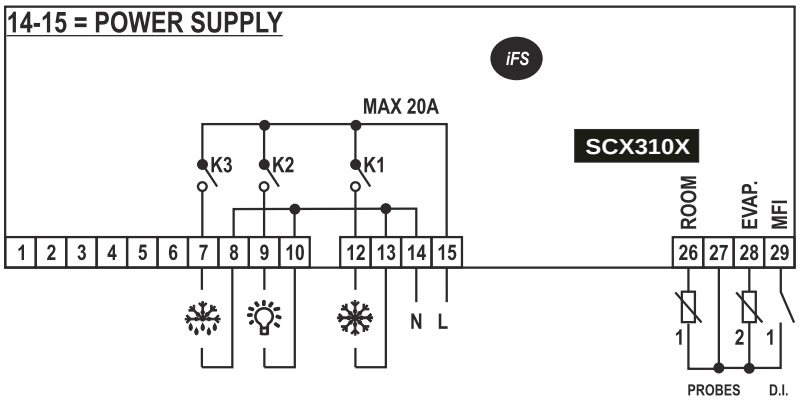
14-15 = POWER SUPPLY
iFS
MAX 20A
SCX310X
K3
K2
K1
ROOM
EVAP.
MFI
1 2 3 4 5 6 7 8 9 10 12 13 14 15
26 27 28 29
N L
1
2
1
PROBES
D.I.

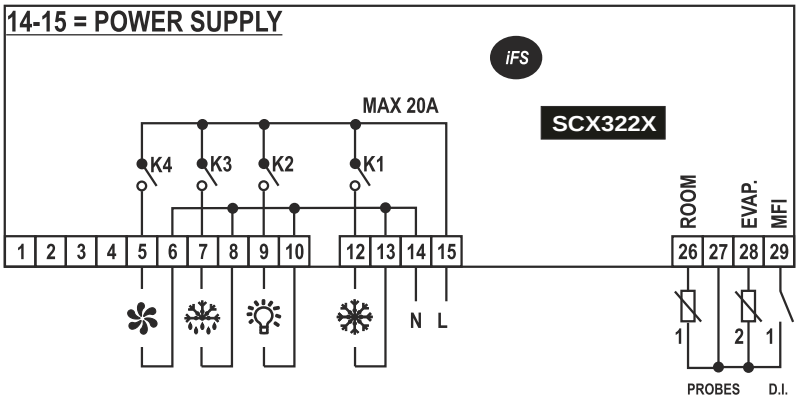
14-15 = POWER SUPPLY
iFS
MAX 20A
SCX322X
K4
K3
K2
K1
ROOM
EVAP.
MFI
1 2 3 4 5 6 7 8 9 10 12 13 14 15
26 27 28 29
N L
1
2
1
PROBES
D.I.

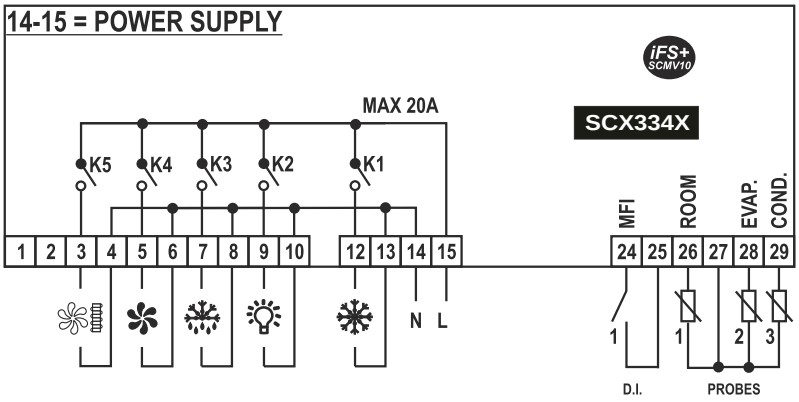
14-15 = POWER SUPPLY
iFS+
SCMV10
MAX 20A
SCX334X
K5
K4
K3
K2
K1
MFI
ROOM
EVAP.
COND.
1 2 3 4 5 6 7 8 9 10 12 13 14 15
24 25 26 27 28 29
N L
1
1
2
3
D.I.
PROBES